Specification

Basic Parameters

Parameter	Details
Operating Voltage	3.3V
Type-C Input Voltage	5V DC
Max Charging Current	0.5A
Sleep Current (Deep Sleep Mode, Battery-Powered)	Version 1.0: 14μA Version 1.1: 37μA
Operating Temperature	-10~60℃
Dimension	20.5x25mm

Hardware Information

Parameter	Details
Processor	RISC-V single-core processor
Main Frequency	160 MHz
SRAM	512KB
ROM	320KB
Flash	4MB
RTC SRAM	16KB
USB	USB 2.0 CDC

WIFI

Parameter	Details
WIFI Protocol	IEEE 802.11b/g/n; IEEE 802.11ax (20 MHz-only non-AP mode)
Bandwidth	Support 20 MHz and 40 MHz at 2.4 GHz band
WIFI Mode	Station, SoftAP, SoftAP+Station combined mode
WIFI Frequency	2.4GHz
Frame Aggregation	TX/RX A-MPDU, TX/RX A-MSDU

Bluetooth

Parameter	Details
Bluetooth Protocol	Bluetooth 5, Bluetooth mesh
Bluetooth Frequency	125 Kbps, 500 Kbps, 1 Mbps, 2 Mbps

IEEE 802.15.4

Parameter	Details
Protocol	Compatible with IEEE 802.15.4-2015 protocol
Frequency band	2.4GHz
Data rate	250Kbps
Supported Standards	Supports Thread 1.3 and Zigbee 3.0

Ports

Parameter	Details
Digital I/O	x13
LED PWM	6 Channel
SPI	x1
UART	x3 (LP UART x1)
I2C	x2 (LP I2C x1)
I2S	x1
IR Transceiver	transmit channel x2, receive channel x2
ADC	1 × 12-bit SAR ADC, 7 Channel
DMA Controller	transmit channel x3, receive channel x3

Pinout

Board Overview

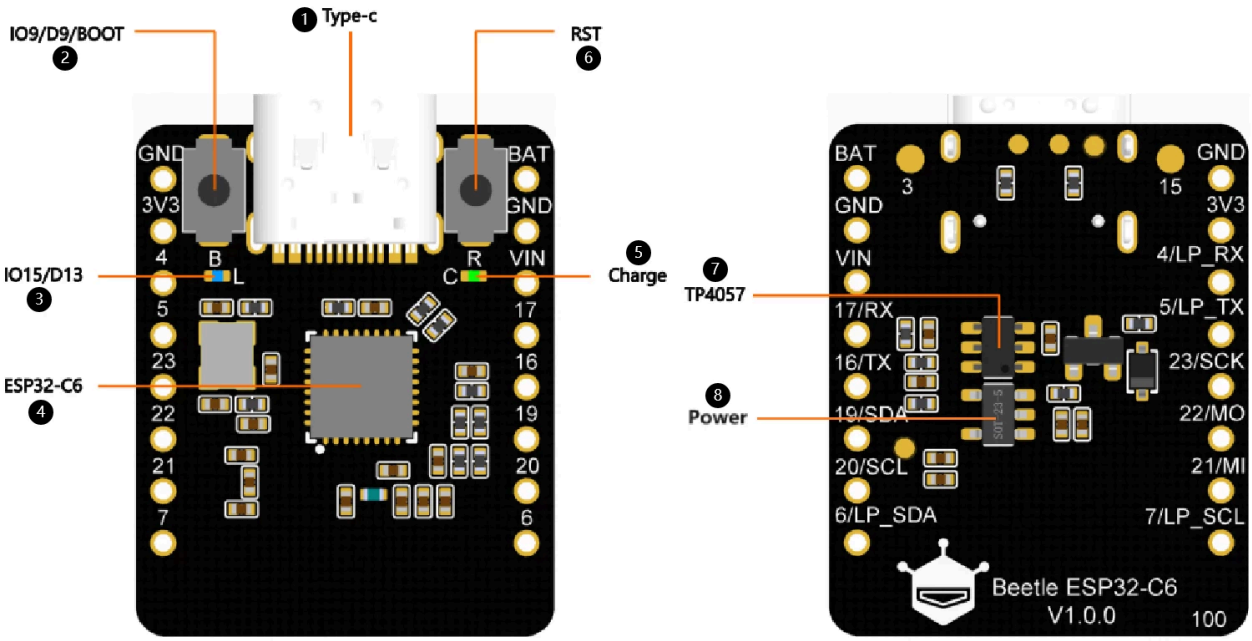

Serial Num.	Name	Details
1	Type-C	Type-C USB port
2	IO9/D9/BOOT	GPIO9 / Boot button
3	IO15/D13	Onboard LED pin
4	ESP32-C6	ESP32-C6FH4 chip
5	Charge	Charging indicator > Off: Not plugged in power supply or fully charged > On: Charging > Blinking: Battery not connected
6	RST	Reset button
7	TP4057	TP4057 lithium battery charge management chip
8	Power	V1.0: RT9080 3.3V LDO V1.1: TPS62A02DRLR 3.3V DC-DC

Pin Diagram

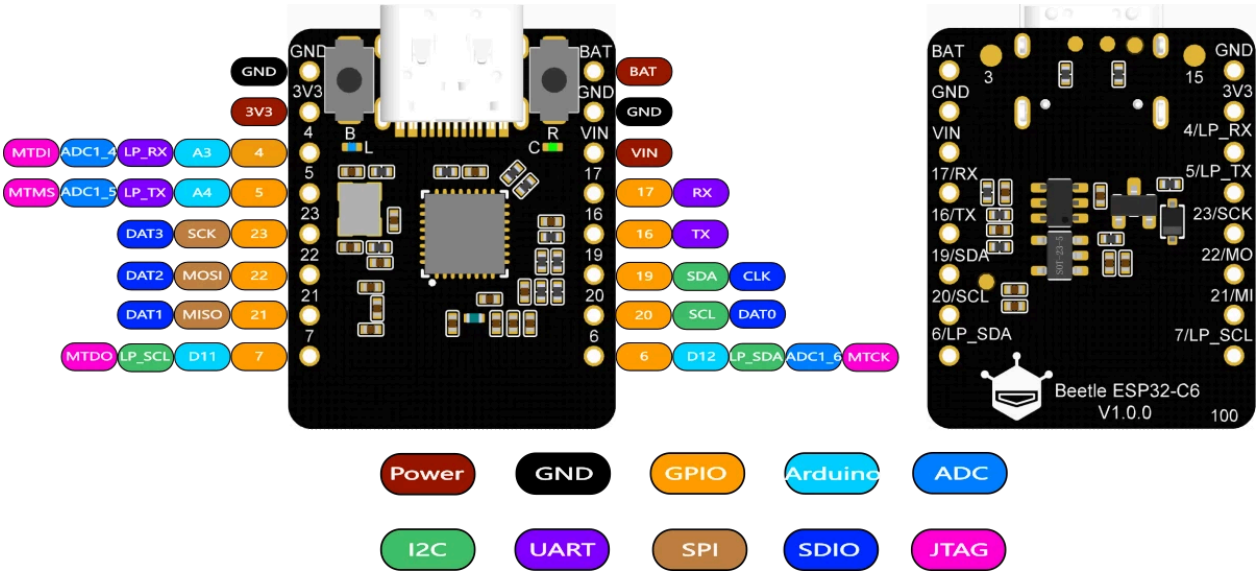

Pin Definition

Name	Details
Power	Power pin > VIN: 5V DC > 3V3: 3.3V stable output
GND	Common ground pin
GPIO	ESP32 default GPIO number
Arduino	Beetle ESP32-C6 GPIO mapping in Arduino
ADC	ESP32 default analog-to-digital conversion pin
I2C	I2C interface > Beetle ESP32-C6 I2C mapping in Arduino > LP_SDA/SCL: Low power I2C pin
UART	UART interface > LP_TX/RX: Low power UART pin
SPI	Beetle ESP32-C6 SPI mapping in Arduino
SDIO	ESP32 default SDIO pin
JTAG	Debug interface